Hooded Tank Vent
KITO BEH-4-...
KITO BEH-5-...
(with KITO flame arrester element, vertical connection)

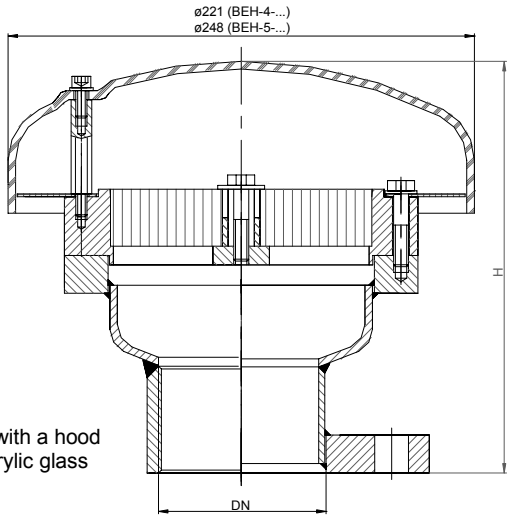

design with a hood
from acrylic glass

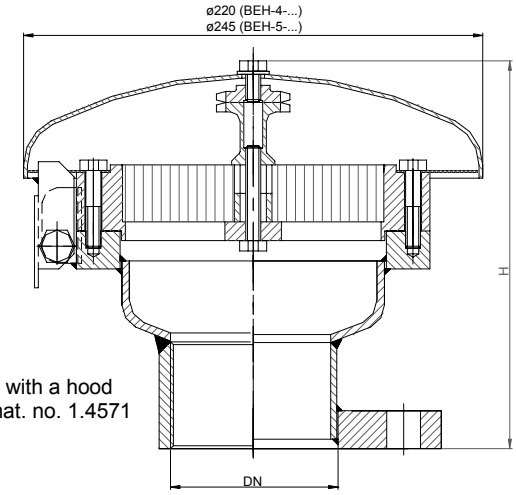

design with a hood
from mat. no. 1.4571

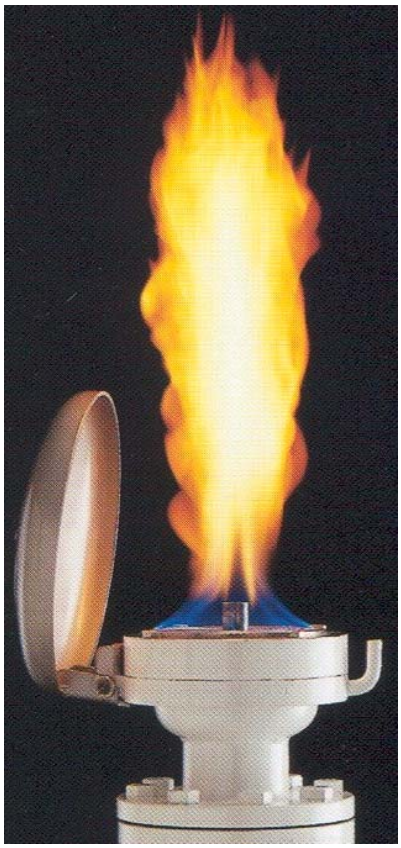

EC type approval ATEX 100 a and
EN 12874

CE -designation available

dimensions in mm

DN		Name of type		H (mm)		weight (kg)	
DIN	ANSI			BEH-4	BEH-5	BEH-4	BEH-5
25	1”	BEH-4- 25	-	185	-	9,0	-
32	1 ¼“	BEH-4- 32	-	185	-	9,0	-
40	1 ½“	BEH-4- 40	-	185	-	9,5	-
50	2“	BEH-4- 50	BEH-5- 50	185	205	10,0	12,0
65	2 ½“	BEH-4- 65	BEH-5- 65	185	205	10,5	12,5
80	3“	BEH-4- 80	BEH-5- 80	185	205	12,0	13,0
100	4“	-	BEH-5-100	-	205	-	14,0

Design subject to change

performance curves : B 0.1 N

Standard design

housing : St 37-2, mat. no. 1.4571
flame arrester element : single grid with straight corrugation gap width 0,5 mm
casing for grid : mat. no. 1.4571
grid : mat. no. 1.4310 / 1.4571
weather hood : PMMA, mat. no. 1.4571 (Hood can fold automatically as a result of folding mechanism and fusing element)
protective screen : Nytal
flange connection : DIN 2501 PN 10, ANSI 150 lbs, is also available in threaded format

Other materials, special designs, heating etc upon request.

Application

As breather/venting safety device incorporating an explosion and endurance burning flame arrester for installation on top of storage tanks, tank access covers or breather pipes. The breather allows for the unimpeded flow of gases out to atmosphere and clean air into the tank/pipe thereby preventing vacuum locks whilst ensuring provision of a permanent and reliable protection against any flashback into the tank/pipe.
This device is not permitted to be installed in enclosed areas.
Approved for all materials of the explosion group IIA with a maximum experimental safe gap (MESG) > 0,9.

Performance curves
KITO BEH-4-...
KITO BEH-5-...

Flow capacity V based on air of a density ρ = 1,29 kg/m³ at T = 273 K and atmospheric pressure p = 1,013 mbar. For other gases the flow can be approximately calculated by

$$\dot{V} = \dot{V}_b \cdot \sqrt{\frac{\rho_b}{1{,}29}} \qquad or \qquad \dot{V}_b = \dot{V} \cdot \sqrt{\frac{1{,}29}{\rho_b}}$$

KITO BEH-4-...

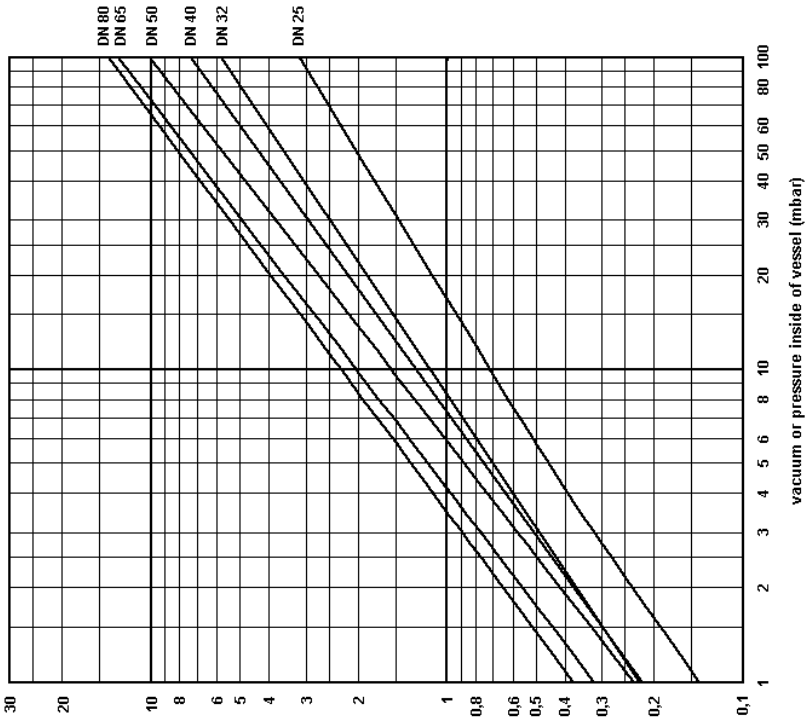

KITO BEH-5-...

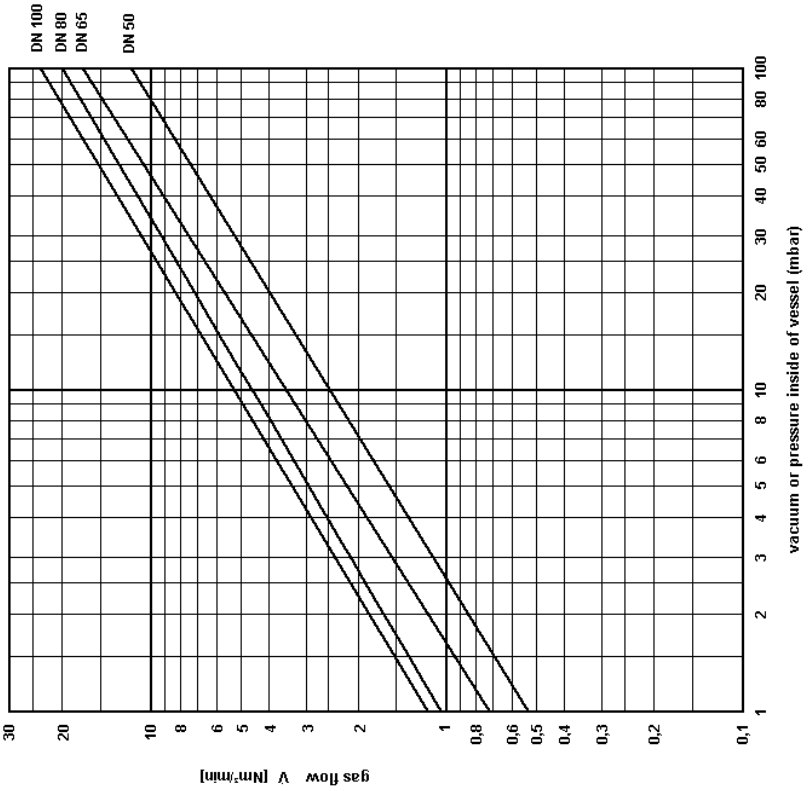

Design subject to change