Manufacturer: -
BARTON FIRTOP ENGINEERING COMPANY LIMITED
Stoke Heath Works, Hanbury Road.
Bromsgrove. Worcestershire. B60 4LT.
ENGLAND
Telephone: (44) 01527 831644 or 575211
Fax: (44) 01527 832638
E-mail: sales@bartonfirtop.co.uk

Data Sheet Number:
SDD/FIR/PN16/CI
Revision: **01**

R/F – PN16 RATING DUPLEX 'FIRPLEX' STRAINER (Cast Iron)

Sizes: ½" to 4" Nominal Bore

Pressure: Class PN16

Features:
- Simple change-over operation.
- Linked Ball Valve mechanism for Minimal bypass / leakage.
- Red oxide Finish.
- 40 Mesh Baskets as Standard.

Options:
- Special Baskets,
- D.P. Tappings/Gauge,
- Magnetic Basket Inserts,
- Special Finish,
- Other materials / ratings available.

Standards: S.E.P. (Group 2 liquids only)
BS EN 1092 Flange Dimensions.
EN 10204 3.1 Certification.

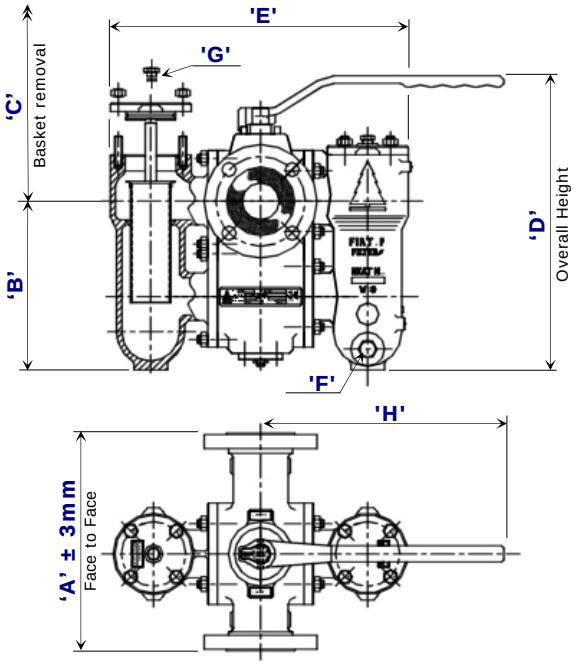

All data is subject to confirmation at the time of order. Our policy is one of continual improvement and we reserve the right to amend details without prior notice.

Size		Dimensions (mm)								Basket Area (cm^2)	Weight (KG)
Inch	mm	'A' Face to Face	'B' Base to C/line	'C' Basket Removal	'D' Overall Height	'E' Overall Width	'F' Drain (NPT)	'G' Vent (NPT)	'H' Handle Width		
½"	*15*	190.0	142.0	150.0	272.0	272.0	¼"	¼"	280.0	117.8	T.B.A.
¾"	*20*	190.0	142.0	150.0	272.0	272.0	¼"	¼"	280.0	117.8	T.B.A.
1"	*25*	200.0	142.0	150.0	272.0	272.0	¼"	¼"	280.0	117.8	T.B.A.
1½"	*40*	260.0	182.0	195.0	355.0	360.0	3/8"	¼"	300.0	174.2	T.B.A.
2"	*50*	295.0	227.0	260.0	395.0	398.0	½"	¼"	330.0	269.7	T.B.A.
3"	*80*	415.0	315.0	360.0	530.0	540.0	¾"	3/8"	450.0	559.8	T.B.A.
4"	*100*	520.0	417.0	460.0	670.0	713.0	¾"	½"	560.0	974.5	T.B.A.

Materials of Construction	
Item	**Cast Iron**
Valve Body	BS 1452 Gr.250 (Equiv. to DIN 1691 GG25, EN1561 ENGJL 250 & A48M-94 250)
Basket Chambers	BS 1452 Gr.250 (Equiv. to DIN 1691 GG25, EN1561 ENGJL 250 & A48M-94 250)
Chamber Covers	BS 1452 Gr.250 (Equiv. to DIN 1691 GG25, EN1561 ENGJL 250 & A48M-94 250)
Change-over Handle	BS 1452 Gr.250 (Equiv. to DIN 1691 GG25, EN1561 ENGJL 250 & A48M-94 250)
Drain / Vent plugs	ASTM A105N
Studbolts	ASTM A193 B7M - Zinc Plated
Full Nuts	ASTM A194 2HM - Zinc Plated
Diverter Balls	Stainless Steel 316
Ball Seats	P.T.F.E.
Internal Shafts	Stainless Steel 316
'O'-Rings	Viton
Baskets (Perforated)	Stainless Steel 316 (Lined with 40 Mesh* as Standard)

* Baskets can be lined with various meshes to suit customer requirements.

Model Number Derivation: -

The model number can be derived as follows: - **A***/PN16/250/FLD**

Denotes the size i.e. add '**025**' for a 1"

'**250**' denotes Cast Iron

For more information, visit our Web Site: www.bartonfirtop.co.uk