Manufacturer: -
BARTON FIRTOP ENGINEERING COMPANY LIMITED
Stoke Heath Works, Hanbury Road.
Bromsgrove. Worcestershire. B60 4LT.
ENGLAND
Telephone: (44) 01527 831644 or 575211
Fax: (44) 01527 832638
E-mail: sales@bartonfirtop.co.uk

Data Sheet Number:
SDD/FIR/PN16/STL
Revision: **01**

R/F – PN16 RATING DUPLEX 'FIRPLEX' STRAINER (STEEL)

Sizes: ½" to 4" Nominal Bore

Pressure: Class PN16

Features:
- Simple change-over operation.
- Linked Ball Valve mechanism for Minimal bypass / leakage.
- Red oxide Finish (Carbon Steel).
- 40 Mesh Baskets as Standard.

Options:
- Special Baskets,
- D.P. Tappings/Gauge,
- Magnetic Basket Inserts,
- Flanged Drains / Vents,
- Special Finish,
- Other materials / ratings available.

Standards: PED 97/23/EC.
BS EN 1092 Flange Dimensions.
EN 10204 / NACE Certification.

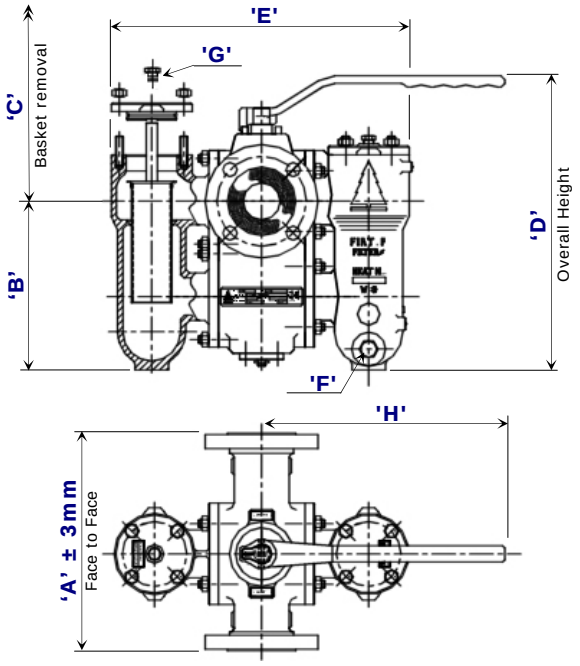

All data is subject to confirmation at the time of order. Our policy is one of continual improvement and we reserve the right to amend details without prior notice.

Size		Dimensions (mm)								Basket Area (cm^2)	Weight (KG)
Inch	mm	'A' Face to Face	'B' Base to C/line	'C' Basket Removal	'D' Overall Height	'E' Overall Width	'F' Drain (NPT)	'G' Vent (NPT)	'H' Handle Width		
½"	*15*	190.0	142.0	150.0	272.0	272.0	¼"	¼"	280.0	117.8	18.0
¾"	*20*	190.0	142.0	150.0	272.0	272.0	¼"	¼"	280.0	117.8	18.0
1"	*25*	200.0	142.0	150.0	272.0	272.0	¼"	¼"	280.0	117.8	20.0
1½"	*40*	260.0	182.0	195.0	355.0	360.0	3/8"	¼"	300.0	174.2	38.5
2"	*50*	295.0	227.0	260.0	395.0	398.0	½"	¼"	330.0	269.7	57.5
3"	*80*	415.0	315.0	360.0	530.0	540.0	¾"	3/8"	450.0	559.8	131.0
4"	*100*	520.0	417.0	460.0	670.0	713.0	¾"	½"	560.0	974.5	T.B.A.

Materials of Construction		
Item	**Carbon Steel**	**Stainless Steel**
Valve Body	ASTM A216 WCB	ASTM A351 CF8M
Basket Chambers	ASTM A216 WCB	ASTM A351 CF8M
Chamber Covers	ASTM A216 WCB	ASTM A351 CF8M
Change-over Handle	ASTM A216 WCB	ASTM A351 CF8M
Drain / Vent plugs	ASTM A105N	ASTM A182 F316
Studbolts	ASTM A193 B7M - Zinc Plated	
Full Nuts	ASTM A194 2HM - Zinc Plated	
Diverter Balls	Stainless Steel 316	
Ball Seats	P.T.F.E.	
Internal Shafts	Stainless Steel 316	
'O'-Rings	Viton	
Baskets (Perforated)	Stainless Steel 316 (Lined with 40 Mesh* as Standard)	

* Baskets can be lined with various meshes to suit customer requirements.

Model Number Derivation: -

The model number can be derived as follows: - **A***/PN16/***/FLD**

Denotes the size i.e. add '**025**' for a 1"

'**216**' denotes Carbon Steel
'**351**' denotes Stainless Steel

For more information, visit our Web Site: www.bartonfirtop.co.uk