Manufacturer: -
**BARTON FIRTOP ENGINEERING COMPANY LIMITED**
Stoke Heath Works, Hanbury Road.
Bromsgrove. Worcestershire. B60 4LT.
ENGLAND
Telephone: (44) 01527 831644 or 575211
Fax: (44) 01527 832638
E-mail: sales@bartonfirtop.co.uk

Data Sheet Number:
**SDD/MQR/R150/STL**
Revision: **03**

# R/F - 150LB RATING QUICK-RELEASE MONO-IN-LINE STRAINER

**Sizes:** ¾" to 12" Nominal Bore

**Pressure:** ANSI Class 150LB

**Features:**
- Integrally Cast Housing.
- Quick-Release Closure.
- Red oxide Finish as standard.
- 40 Mesh Screen as Standard.
- Integral feet on 6" and over.

**Options:**
- Special Gasket, Special Basket,
- D.P. Tappings/Gauge,
- Magnetic Basket Insert,
- Flanged Drains / Drain Valves,
- Special Finish / Linings.

**Standards:** PED 97/23/EC.
ANSI B16.5 Flange Dimensions.
EN 10204 / NACE Certification.

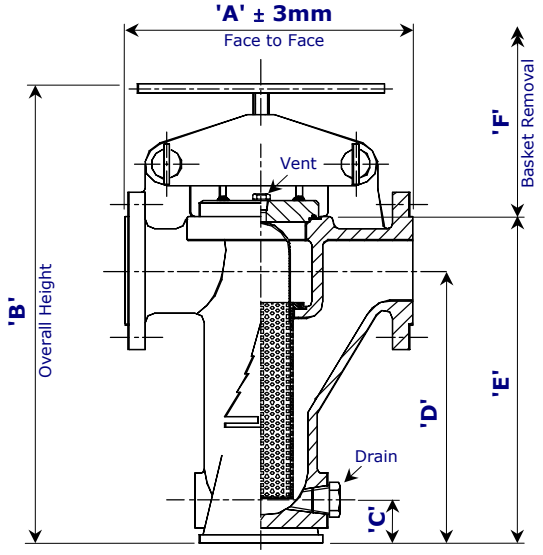


All data is subject to confirmation at the time of order. Our policy is one of continual improvement and we reserve the right to amend details without prior notice.

| Size | | Dimensions | | | | | | Basket Area ($cm^2$) | Vent (NPT) | Drain (NPT) | Weight (KG) |
|---|---|---|---|---|---|---|---|---|---|---|---|
| Inch | mm | 'A' Face to Face | 'B' Overall Height | 'C' Base to Drain | 'D' Base to Centreline | 'E' Base to Cover | 'F' Basket Removal | | | | |
| ¾" | *20* | 224.0 | 333.0 | 25.0 | 180.0 | 213.0 | 200.0 | 241.0 | ¼" | ¾" | 7.0 |
| 1" | *25* | 225.0 | 345.0 | 28.0 | 190.0 | 225.0 | 200.0 | 241.0 | ¼" | ¾" | 13.5 |
| 1½" | *40* | 240.0 | 420.0 | 35.0 | 254.0 | 297.0 | 275.0 | 375.0 | ¼" | ¾" | 19.0 |
| 2" | *50* | 315.0 | 490.0 | 38.0 | 314.0 | 362.0 | 340.0 | 488.0 | ¼" | ¾" | 27.5 |
| 3" | *80* | 365.0 | 570.0 | 40.0 | 342.0 | 411.0 | 375.0 | 652.0 | 3/8" | ¾" | 46.5 |
| 4" | *100* | 445.0 | 695.0 | 47.0 | 426.0 | 505.0 | 450.0 | 1088.0 | 3/8" | 1" | 70.0 |
| 6" | *150* | 600.0 | 990.0 | 95.0 | 619.0 | 734.0 | 630.0 | 2151.0 | ½" | 1½" | 167.0 |
| 8" | *200* | 715.0 | 1190.0 | 112.5 | 787.0 | 927.0 | 800.0 | 3973.0 | ½" | 1½" | 310.0 |
| 10" | *250* | 855.0 | 1415.0 | 120.0 | 908.0 | 1077.0 | 940.0 | 5304.0 | ½" | 1½" | 550.0 |
| 12" | *300* | 1015.0 | 1570.0 | 175.0 | 1152.0 | 1367.0 | 1180.0 | 8295.0 | ½" | 2" | 600.0 |

| Materials of Construction | | |
|---|---|---|
| **Item** | **Carbon Steel** | **Stainless Steel** |
| Strainer Body (Cast) | ASTM A216 WCB | ASTM A351 CF8M |
| *Strainer Cover | ASTM A516 Gr60 / A216 WCB | ASTM A240 316 / A351 CF8M |
| Strainer Basket | ST.ST. 316 (40 Mesh as Standard / to Customer Specification) | |
| Cover Gasket (O-ring) | Nitrile as Standard / to Customer Specification. | |
| Vent Plug | ASTM A105N | ASTM A182 F316 |
| Drain Plug | ASTM A105N | ASTM A182 F316 |
| Strongback | ASTM A216 WCB | ASTM A351 CF8M |
| Screw Handle | ASTM A193 B7M - Zinc Plated / ST.ST. 316 Handle | |
| Quick Release Pin | BS 970 080 M40 - Zinc Plated | |
| Linch pin | Carbon Steel - Zinc Plated | |

* The Strainer cover may be furnished from Plate or Casting depending upon size / availability.

**Model Number Derivation: -**
The model number can be derived as follows: - **A***/R15/***/MQR**

Denotes the size i.e. add '**025**' for a 1"

'**216**' denotes Carbon Steel
'**351**' denotes Stainless Steel

*For more information, visit our Web Site: www.bartonfirtop.co.uk*