Manufacturer: -
BARTON FIRTOP ENGINEERING COMPANY LIMITED
Stoke Heath Works, Hanbury Road.
Bromsgrove. Worcestershire. B60 4LT.
ENGLAND
Telephone: (44) 01527 831644 or 575211
Fax: (44) 01527 832638
E-mail: sales@bartonfirtop.co.uk

Data Sheet Number:
SDD/MQR/R300/STL
Revision: **03**

R/F - 300LB RATING QUICK-RELEASE MONO-IN-LINE STRAINER

Sizes: ¾" to 12" Nominal Bore

Pressure: ANSI Class 300LB

Features:
- Integrally Cast Housing.
- Quick-Release Closure.
- Red oxide Finish as standard.
- 40 Mesh Screen as Standard.
- Integral feet on 6" and over.

Options:
- Special Gasket, Special Basket,
- D.P. Tappings/Gauge,
- Magnetic Basket Insert,
- Flanged Drains / Drain Valves,
- Special Finish / Linings.

Standards: PED 97/23/EC.
ANSI B16.5 Flange Dimensions.
EN 10204 / NACE Certification.

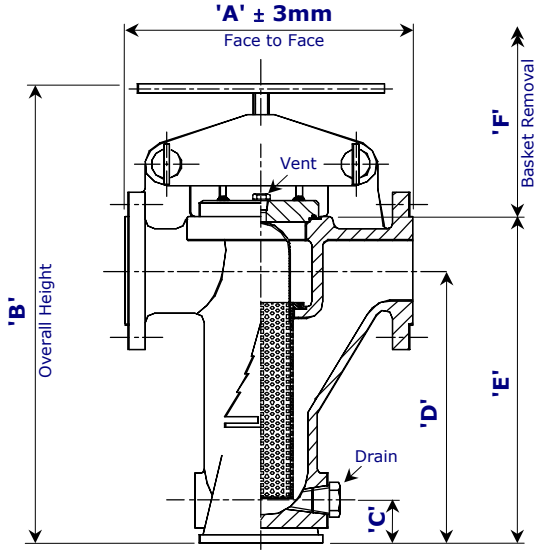

All data is subject to confirmation at the time of order. Our policy is one of continual improvement and we reserve the right to amend details without prior notice.

Size		Dimensions						Basket Area (cm^2)	Vent (NPT)	Drain (NPT)	Weight (KG)
Inch	mm	'A' Face to Face	'B' Overall Height	'C' Base to Drain	'D' Base to Centreline	'E' Base to Cover	'F' Basket Removal				
¾"	*20*	224.0	333.0	25.0	180.0	213.0	200.0	241.0	¼"	¾"	7.5
1"	*25*	232.0	345.0	28.0	190.0	225.0	200.0	241.0	¼"	¾"	14.5
1½"	*40*	245.0	420.0	35.0	254.0	297.0	275.0	375.0	¼"	¾"	21.5
2"	*50*	321.0	490.0	38.0	314.0	362.0	340.0	488.0	¼"	¾"	29.5
3"	*80*	375.0	570.0	40.0	342.0	411.0	375.0	652.0	3/8"	¾"	49.0
4"	*100*	455.0	715.0	47.0	426.0	508.0	450.0	1088.0	3/8"	1"	92.0
6"	*150*	620.0	1010.0	95.0	619.0	749.0	630.0	2151.0	½"	1½"	225.0
8"	*200*	740.0	1320.0	109.5	787.0	952.0	800.0	3973.0	½"	1½"	405.0
10"	*250*	890.0	1495.0	120.0	908.0	1103.0	940.0	5304.0	½"	1½"	655.0
12"	*300*	1050.0	1570.0	175.0	1152.0	1367.0	1180.0	8295.0	½"	2"	700.0

Materials of Construction		
Item	**Carbon Steel**	**Stainless Steel**
Strainer Body (Cast)	ASTM A216 WCB	ASTM A351 CF8M
*Strainer Cover	ASTM A516 Gr60 / A216 WCB	ASTM A240 316 / A351 CF8M
Strainer Basket	ST.ST. 316 (40 Mesh as Standard / to Customer Specification)	
Cover Gasket (O-ring)	Nitrile as Standard / to Customer Specification.	
Vent Plug	ASTM A105N	ASTM A182 F316
Drain Plug	ASTM A105N	ASTM A182 F316
Strongback	ASTM A216 WCB	ASTM A351 CF8M
Screw Handle	ASTM A193 B7M - Zinc Plated / ST.ST. 316 Handle	
Quick Release Pin	BS 970 080 M40 - Zinc Plated	
Linch pin	Carbon Steel - Zinc Plated	

* The Strainer cover may be furnished from Plate or Casting depending upon size / availability.

Model Number Derivation: -
The model number can be derived as follows: - **A***/R30/***/MQR**

Denotes the size i.e. add '**025**' for a 1"

'**216**' denotes Carbon Steel
'**351**' denotes Stainless Steel

For more information, visit our Web Site: www.bartonfirtop.co.uk