Manufacturer :-
BARTON FIRTOP ENGINEERING Co.,Ltd.
Stoke Heath Works, Hanbury Road.
Bromsgrove, Worcestershire. B60 4LT
ENGLAND
Telephone :- (44) 01527 831644 / 575211
Fax :- (44) 01527 832638

FIRTOP FILTERS

Document Number :
SDD/TTH/R300/STL

FIRTOP FILTERS

300LB RATING CONICAL TOP HAT TEMPORARY STRAINER

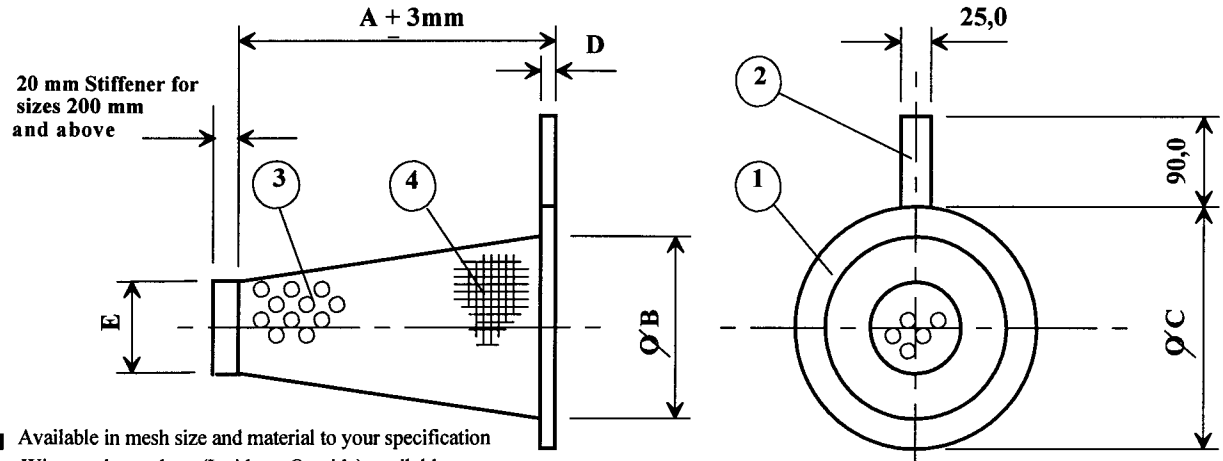

- Available in mesh size and material to your specification
- Wire mesh overlays (Inside or Outside) available upon request
- Tag numbers, size & rating stamped on handle as standard
- Available as either BHS or BHL

All data subject to confirmation at time of order. Our policy is one of continuous improvement and we reserve the right to amend any details without prior notice.

SPECIFICATIONS

MODEL / ASSEMBLY NUMBER		SIZE	DIMENSION						WEIGHT (KG)	
Carbon Steel	Stainless Steel	N.B	A BHS	A BHL	B	C	D	E	BHS	BHL
A020-R30-430-TB*	A020-R30-316-TB*	20mm	38	50	15	62	3	9	0.2	0.2
A025-R30-430-TB*	A025-R30-316-TB*	25mm	38	50	22	68	3	12	0.2	0.2
A040-R30-430-TB*	A040-R30-316-TB*	40mm	63	88	31	88	3	19	0.2	0.2
A050-R30-430-TB*	A050-R30-316-TB*	50mm	63	88	44	104	3	31	0.2	0.3
A080-R30-430-TB*	A080-R30-316-TB*	80mm	88	114	67	142	3	50	0.4	0.6
A100-R30-430-TB*	A100-R30-316-TB*	100mm	114	152	88	174	3	63	0.7	0.9
A125-R30-430-TB*	A125-R30-316-TB*	125mm	139	190	117	209	3	82	1.3	1.5
A150-R30-430-TB*	A150-R30-316-TB*	150mm	165	228	139	244	3	101	1.5	1.8
A200-R30-430-TB*	A200-R30-316-TB*	200mm	215	304	181	301	3	142	2.2	2.7
A250-R30-430-TB*	A250-R30-316-TB*	250mm	254	355	228	355	5	184	3.1	4.5
A300-R30-430-TB*	A300-R30-316-TB*	300mm	304	419	276	415	5	225	4.0	5.4
A350-R30-430-TB*	A350-R30-316-TB*	350mm	330	431	320	479	5	257	5.4	6.3
A400-R30-430-TB*	A400-R30-316-TB*	400mm	355	482	368	533	5	298	6.3	7.7
A450-R30-430-TB*	A450-R30-316-TB*	450mm	381	533	415	590	5	342	7.7	9.5
A500-R30-430-TB*	A500-R30-316-TB*	500mm	431	609	466	647	5	381	12.7	13.6
A600-R30-430-TB*	A600-R30-316-TB*	600mm	508	711	568	768	5	457	15.8	18.1
A750-R30-430-TB*	A750-R30-316-TB*	750mm	762	1143	723	943	5	508	20.8	27.2
A900-R30-430-TB*	A900-R30-316-TB*	900mm	863	1270	876	1104	5	660	35.3	45.3

'S' Denotes Short (150%) 'L' Denotes Long (200%)

MATERIALS OF CONSTRUCTION

ITEM No	DESCRIPTION	CARBON STEEL	STAINLESS STEEL
01	SUPPORT RING	BS 1501 151 430A	AISI 316
02	HANDLE	BS 4360 43A	AISI 316
03	PERFORATED PLATE	BS 4360 43A	AISI 316
04	MESH LINING	MILD STEEL	AISI 316

Sheet Revision : 03