Manufacturer :-
BARTON FIRTOP ENGINEERING Co. Ltd.
Stoke Heath Works, Hanbury Road.
Bromsgrove, Worcestershire. B60 4LT
ENGLAND
Telephone : (44) 01527 831644 / 575211
Facsimile : (44) 01527 832638
e-mail : sales@bartonfirtop.co.uk

Document Number :
SDD/TWH/R150/STL

FIRTOP FILTERS

150LB RATING WITCH HAT TEMPORARY STRAINER

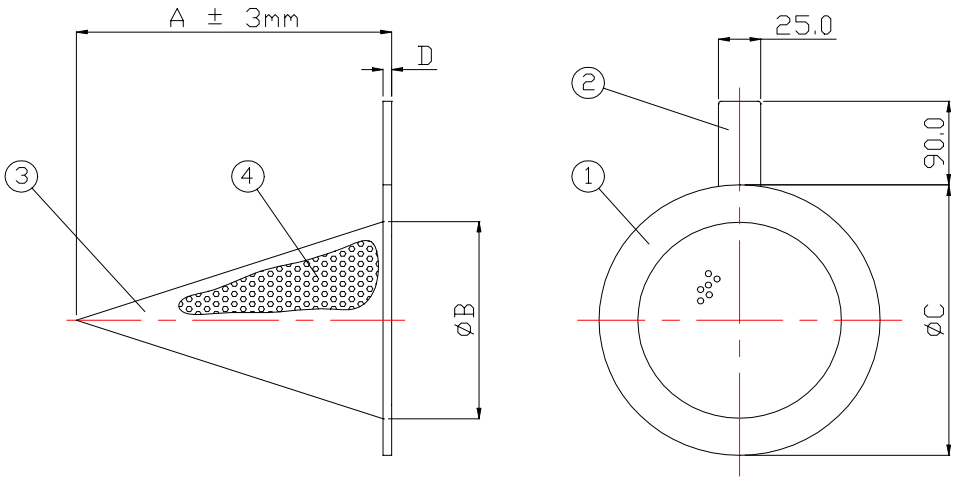

- Available in mesh size & material to your specification.
- Wire mesh overlays (Inside or Outside) available upon request.
- Tag numbers, size & rating stamped on handle as standard.
- Available as either BHS or BHL.

All data subject to confirmation at time of order. Our policy is one of continuous improvement and we reserve the right to amend any details without prior notice.

SPECIFICATIONS

MODEL/ASSEMBLY NUMBER		SIZE	DIMENSIONS (mm)					WEIGHT (Kg)	
Carbon Steel	Stainless Steel	NB	A		B	C	D	BHS	BHL
			BHS	BHL					
A020/R15/430/TW*	A020/R15/316/TW*	20mm (¾")	30	50	15	52	3	0.2	0.2
A025/R15/430/TW*	A025/R15/316/TW*	25mm (1")	38	50	22	62	3	0.2	0.2
A040/R15/430/TW*	A040/R15/316/TW*	40mm (1½")	101	139	31	79	3	0.2	0.2
A050/R15/430/TW*	A050/R15/316/TW*	50mm (2")	114	152	44	98	3	0.2	0.3
A080/R15/430/TW*	A080/R15/316/TW*	80mm (3")	165	228	67	130	3	0.4	0.4
A100/R15/430/TW*	A100/R15/316/TW*	100mm (4")	215	292	88	168	3	0.6	0.7
A125/R15/430/TW*	A125/R15/316/TW*	125mm (5")	266	355	117	190	3	0.7	0.9
A150/R15/430/TW*	A150/R15/316/TW*	150mm (6")	330	431	139	215	3	1.1	1.5
A200/R15/430/TW*	A200/R15/316/TW*	200mm (8")	431	584	181	273	3	2.0	2.7
A250/R15/430/TW*	A250/R15/316/TW*	250mm (10")	533	685	228	333	5	2.7	3.4
A300/R15/430/TW*	A300/R15/316/TW*	300mm (12")	635	825	276	403	5	3.6	4.9
A350/R15/430/TW*	A350/R15/316/TW*	350mm (14")	660	889	320	444	5	4.5	5.4
A400/R15/430/TW*	A400/R15/316/TW*	400mm (16")	749	990	368	508	5	5.4	7.2
A450/R15/430/TW*	A450/R15/316/TW*	450mm (18")	838	1117	415	542	5	6.8	9.5
A500/R15/430/TW*	A500/R15/316/TW*	500mm (20")	939	1244	466	600	5	9.0	11.7
A600/R15/430/TW*	A600/R15/316/TW*	600mm (24")	1117	1473	568	711	5	12.2	16.3
A750/R15/430/TW*	A750/R15/316/TW*	750mm (30")	1524	2032	723	870	5	19.0	25.4
A900/R15/430/TW*	A900/R15/316/TW*	900mm (36")	1828	2387	876	1035	5	33.1	43.5

* 'S' Denotes Short (150% Open Area) & 'L' Denotes Long (200% Open Area)

MATERIALS OF CONSTRUCTION

ITEM No	DESCRIPTION	CARBON STEEL	STAINLESS STEEL
01	SUPPORT RING	BS 1501 151 430A	AISI 316
02	HANDLE	BS 4360 43A	AISI 316
03	PERFORATED PLATE	BS 4360 43A	AISI 316
04	MESH LINING	MILD STEEL	AISI 316

Sheet Revision : 03