Manufacturer :-
BARTON FIRTOP ENGINEERING Co.,Ltd.
Stoke Heath Works, Hanbury Road.
Bromsgrove, Worcestershire. B60 4LT
ENGLAND
Telephone :- (44) 01527 831644 / 575211
Fax :- (44) 01527 832638

Document Number :
SDD/KGM/YSF/NPT/BR

FIRTOP FILTERS

16 BAR RATING - CAST BRONZE - SCREWED NPT Y-TYPE STRAINER

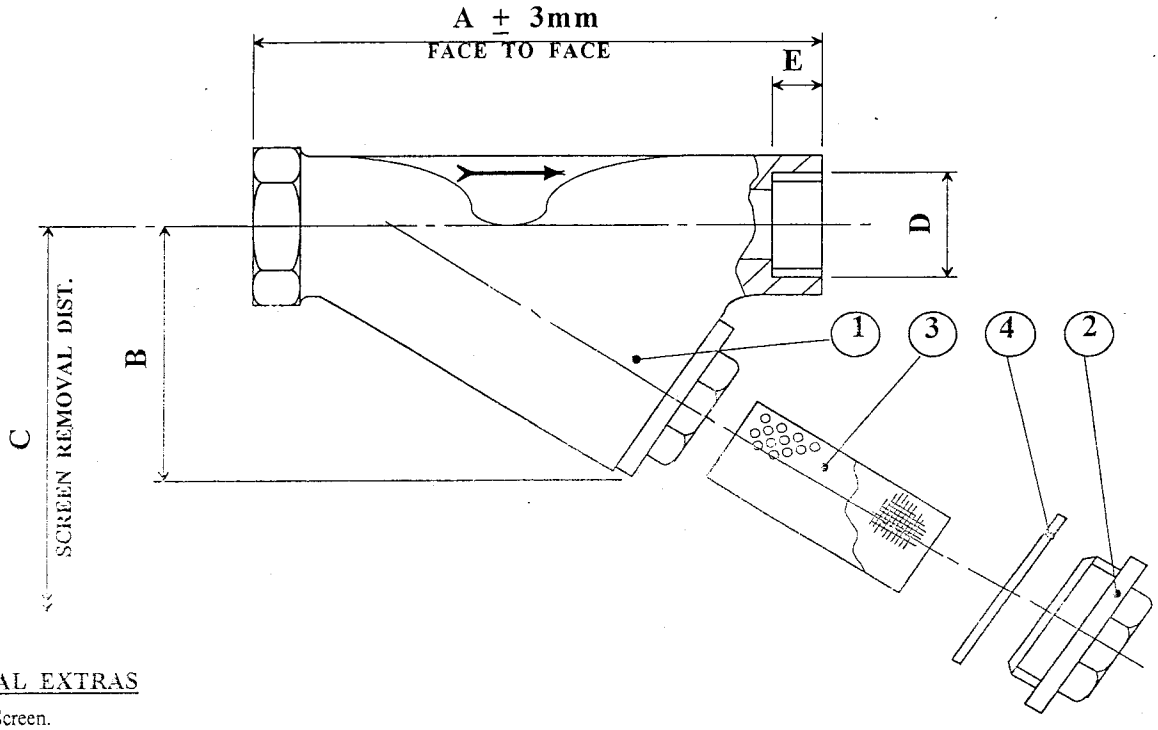

OPTIONAL EXTRAS

- Special Screen.
- Magnetic Insert Screen.
- Special Finishes / Linings.

All data subject to confirmation at time of order. Our policy is one of continuous improvement and we reserve the right to amend any details without prior notice.

SPECIFICATIONS

MODEL / ASSEMBLY NUMBER	SIZE NB	DIMENSIONS					SCREEN		WEIGHT KG
		A	B	C	D	E	Mesh	cm²	
YSF-KGM-015-NPT-B62	15 mm	80	49	76	1/2" NPT	13	1.5ø Perf x 2.5p x .4t OR TO CUSTOMER REQUIREMENTS	31.0	0.55
YSF-KGM-020-NPT-B62	20 mm	100	57	90	3/4" NPT	14		41.0	0.70
YSF-KGM-025-NPT-B62	25 mm	115	72	127	1" NPT	26		80.0	1.00
YSF-KGM-032-NPT-B62	32 mm	135	82	165	1 1/4" NPT	19		157.0	1.60
YSF-KGM-040-NPT-B62	40 mm	160	98	165	1 1/2" NPT	21		157.0	2.00
YSF-KGM-050-NPT-B62	50 mm	195	121	205	2" NPT	22		168.0	4.50

MATERIALS OF CONSTRUCTION

ITEM No	DESCRIPTION	CAST BRONZE
01	STRAINER BODY	ASTM B62 (Cast Bronze)
02	COVER	ASTM B62 (Cast Bronze)
03	SCREEN	AISI 304
04	GASKET	TEFLON.

Sheet Revision : 01