Manufacturer: -
BARTON FIRTOP ENGINEERING COMPANY LIMITED
Stoke Heath Works, Hanbury Road.
Bromsgrove. Worcestershire. B60 4LT.
ENGLAND
Telephone: (44) 01527 831644 or 575211
Fax: (44) 01527 832638
E-mail: sales@bartonfirtop.co.uk

Data Sheet Number:
SDD/YMD/R300/STL
Revision: **05**

R/F - 300LB RATING MEDIUM DUTY 'Y'-TYPE STRAINER

Sizes: ½" to 12" Nominal Bore

Pressure: ANSI Class 300LB

Features:
- Integrally Cast Housing.
- Bolted Cover c/w Drain Plug.
- Red oxide Finish (Carbon Steel).
- 40 Mesh Screen as Standard.

Options:
- Special Gasket, Special Screen
- D.P. Tappings/Gauge,
- Magnetic Screen Insert,
- Flanged Drains / Drain Valves,
- Special Finish / Linings.

Standards: PED 97/23/EC
ANSI B16.5 Flange Dimensions.
EN 10204 / NACE Certification.

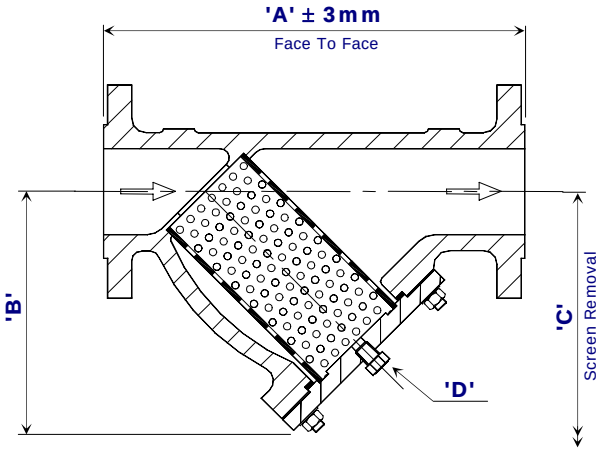

All data is subject to confirmation at the time of order. Our policy is one of continual improvement and we reserve the right to amend details without prior notice.

Size		Dimensions				Screen Area (cm^2)	Weight (KG)
Inch	mm	'A' Face to Face	'B' Base to Centre line	'C' Screen Removal	'D' Drain (NPT)		
½"	*15*	175.0	95.0	165.0	½"	80.0	3.5
¾"	*20*	175.0	95.0	165.0	½"	80.0	4.5
1"	*25*	195.0	110.0	185.0	½"	126.5	6.5
1½"	*40*	275.0	140.0	230.0	½"	199.0	11.5
2"	*50*	315.0	180.0	285.0	½"	333.0	18.0
3"	*80*	405.0	220.0	355.0	½"	574.5	35.5
4"	*100*	490.0	260.0	410.0	½"	923.4	65.5
6"	*150*	582.0	340.0	552.0	¾"	1894.0	125.0
8"	*200*	730.0	440.0	705.0	¾"	2870.0	233.0
10"	*250*	910.0	600.0	1000.0	¾"	5000.0	420.0
12"	*300*	1070.0	640.0	1040.0	¾"	6375.0	445.0

Materials of Construction		
Item	**Carbon Steel**	**Stainless Steel**
Strainer Body (Cast)	ASTM A216 WCB	ASTM A351 CF8M
*Strainer Cover	ASTM A516 Gr60 / A216 WCB	ASTM A240 316 / A351 CF8M
Drain Plug (Forged)	ASTM A105N	ASTM A182 F316
Cover Studbolts	ASTM A193 B7M - Zinc Plated	
Cover Full Nuts	ASTM A194 2HM - Zinc Plated	
Cover Gasket (Flat)	C.N.A.F. as Standard / to Customer Specification	
Screen (Perforated)	ST.ST. 316 (40 Mesh as Standard / to Customer Specification)	

* The Strainer cover may be furnished from Plate or Casting depending upon size / availability.

Model Number Derivation: -
The model number can be derived as follows: - **A***/R30/***/YMD**

Denotes the size i.e. add '**025**' for a 1"

'**216**' denotes Carbon Steel
'**351**' denotes Stainless Steel

For more information, visit our Web Site: www.bartonfirtop.co.uk