Manufacturer :-
BARTON FIRTOP ENGINEERING Co. Ltd.

Stoke Heath Works, Hanbury Road.
Bromsgrove, Worcestershire. B60 4LT
ENGLAND
Telephone : (44) 01527 831644 / 575211
Facsimile : (44) 01527 832638

FIRTOP

Document Number :
SDD/YSW/OPM/STL

FIRTOP FILTERS

SOCKET WELD FORGED Y-TYPE STRAINER

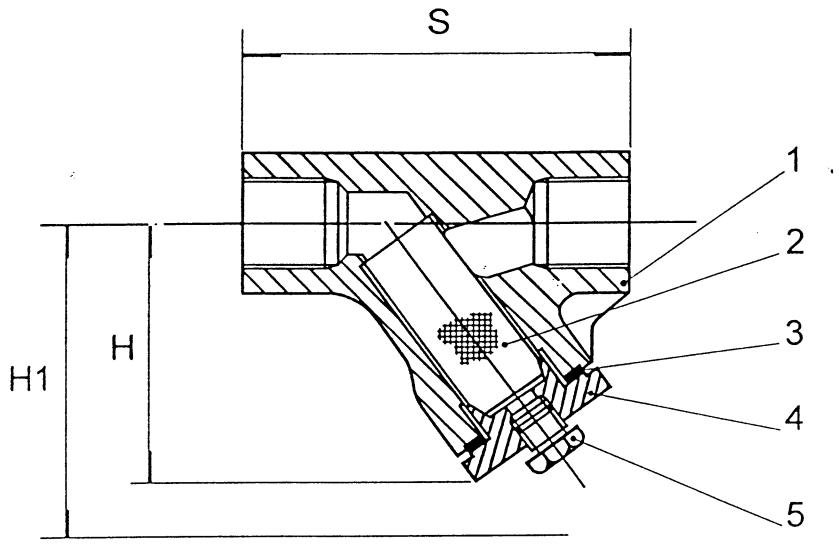

Nr.	PART	MATERIALS			
1	BODY	ASTM A105	ASTM A350 LF2	ASTM A182 F11	ASTM A182 F316
2	SCREEN	AISI 304	AISI 304 or 316		AISI 316
3	GASKET	Stainless Steel + Graphite			
4	COVER	Carbon Steel			Stainless Steel
5	DRAIN PLUG	ASTM A182 F304			ASTM A182 F316

Size	S	H	H1
1/2"	90	60	105
3/4"	110	75	140
1"	130	93	155
1¼"	160	120	195
1½"	160	120	195
2" *	160	145	

* Flanged Cover

Sheet Revision : 01